MP6380 2/10/03 4:24 PM Page 2

VANGUARD™
COMMERCIAL POWER
BRIGGS & STRATTON®
3/LC
CYLINDER LIQUID COOLED

3-Cylinder Liquid-Cooled Engines

TRUST THE POWER™

BRIGGS & STRATTON
COMMERCIAL POWER

Vanguard™ 3/LC is the solution to your biggest challenges.

One of the biggest and costliest challenges you may face is reconfiguring your domestic models to diesel. Not anymore. Briggs & Stratton Daihatsu offers a line of 3-cylinder, liquid-cooled gas, diesel and gaseous fuel engines that are completely interchangeable. Not only do the engines have the same envelope, but the PTO and mounting dimensions are identical. So are the air cleaner and muffler systems. To further enhance versatility, gas and diesel models are available with an optional electronic governor that allows for complete engine management and control by wire rather than cable.

Another advantage is that Vanguard™ 3/LC engines are lighter weight and more compact. In fact, some models are up to eight pounds lighter than the competition.

What's more, Vanguard 3/LC engines reliably deliver robust power at significantly lower vibration and noise levels.

Challenged by where to turn for a high-performance engine solution? Look no further than the versatile Vanguard 3/LC.

VANGUARD™ COMMERCIAL POWER BRIGGS & STRATTON 3/LC CYLINDER LIQUID COOLED

Feature	Benefit	Vanguard Advantage
Lightweight Design	Reduces soil compaction Eases portability	Less turf damage Better mobility
Engine Interchangeability	All engines fit the same envelope Identical PTO and mounting dimensions	Ease of switching from diesel to gas or vice versa Same air cleaner and muffler
Parts Commonality	Similar designs mean reduced number of parts	Lower parts inventory Faster service, better value
Compact Size	Maximum power in small package The market's most compact engine	More powerful engine allows lower engine speeds for lower noise
Liquid Cooling	Cleaner combustion Easily meets emission regulations	All engine models meet current CARB and EPA regulations
Cast Iron Block	Dampens noise	Liquid-cooled engines run quieter
Longevity	Industrial engines, no automotive derivative	Surpasses equipment life

Standard Gasoline Series Specifications

MODEL		DM 700G	DM 950G	DM 954G
Number of cylinders		3	3	3
Bore x stroke (mm)		68 x 64	72 x 78	72 x 78
Displacement [cc (cu. in.)]		697 (42.5)	952 (58.1)	952 (58.1)
Horsepower	(gross)	23.5	31	34
HP @ 3600 RPM	(net intermittent)	22.1	28.0	31
	(net continuous)	20.0	25.3	28.0
Torque	(gross)	37.5/2200	51.6/2200	56.2/2200
Ft/lbs @ 2300 RPM	(net intermittent)	34.2/2200	47/2200	51.2/2200
Dry weight [kg (lb.)]		70 (154)	72 (159)	72 (159)
Direction of rotation			Counterclockwise (looking at flywheel)	
Lubricating system			Pressure feed with spin-on oil filter	
Engine oil	(without oil filter) ltr. (qt.)	3 (3.17)	3 (3.17)	3 (3.17)
capacity	(with oil filter) ltr. (qt.)	3.3 (3.5)	3.3 (3.5)	3.3 (3.5)

Gasoline Engines

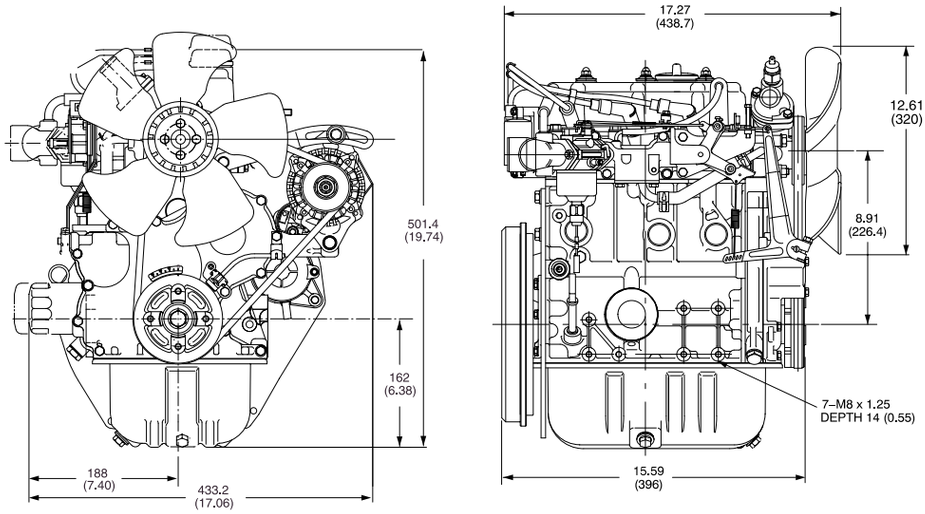

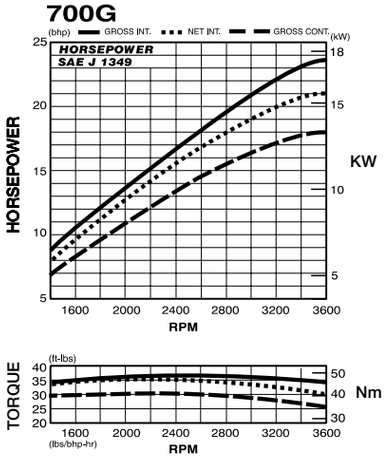

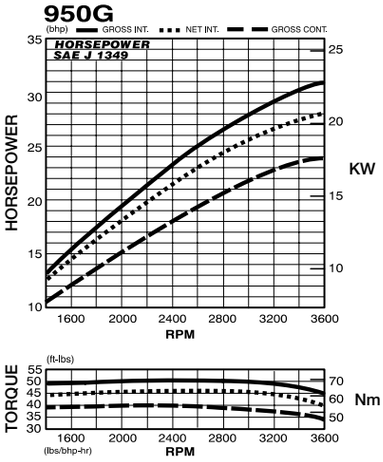

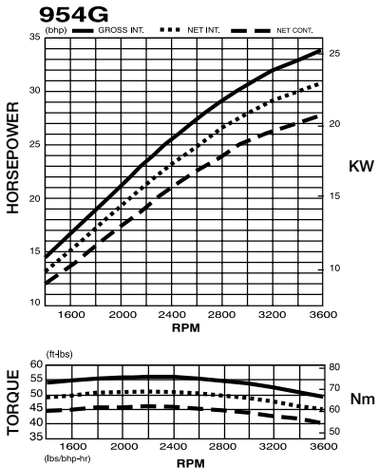

Diesel Base Engines

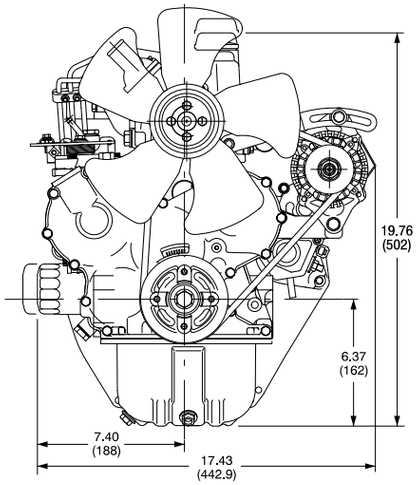

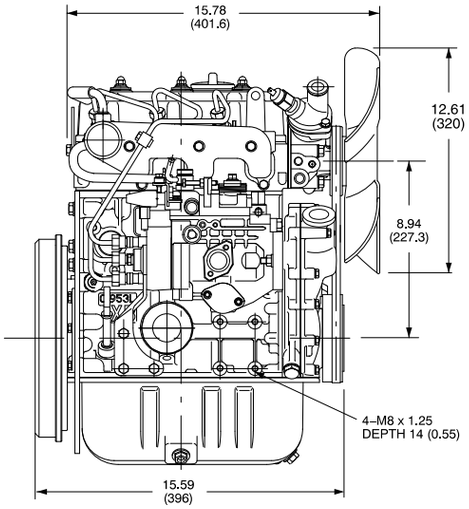

700D

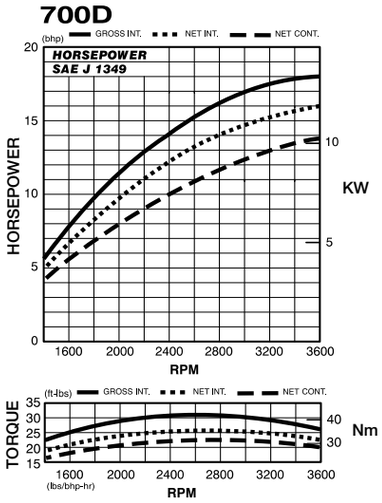

850D

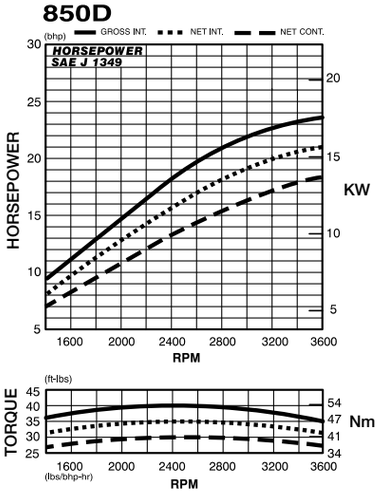

950D

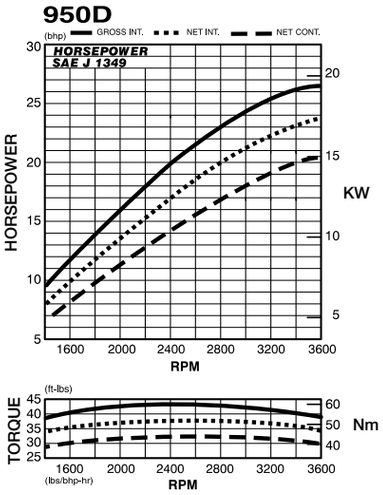

Standard Diesel Series Specifications

MODEL		DM 700D	DM 850D	DM 950D	DM 950DT	DM 954DT
Number of cylinders		3	3	3	3	3
Bore x stroke (mm)		68 x 64	68 x 78	72 x 78	72 x 78	72 x 78
Displacement [cc (cu. in.)]		697 (42.5)	850 (51.8)	952 (58.1)	952 (58.1)	952 (58.1)
Horsepower	(gross)	18.0	23.6	26.5	31	34
HP @ 3600 RPM	(net intermittent)	16.0	21.1	23.8	28	31
	(net continuous)	14.0	18.3	20.8	25	28
Torque	(gross)	32.0/2400	40.0/2400	44.1/2400	54.6/2400	58.3/2400
Ft/lbs @ 2400 RPM	(net intermittent)	26.0/2400	35.0/2400	38.0/2400	49.3/2400	53.2/2400
Dry weight [kg (lb.)]		82 (180)	84 (185)	84 (185)	89 (196)	89 (196)
Direction of rotation		Counterclockwise (looking at flywheel)				
Lubricating system		Pressure feed with spin-on oil filter				
Engine oil	(without oil filter) ltr. (qt.)	3 (3.17)	3 (3.17)	3 (3.17)	3 (3.17)	3 (3.17)
capacity	(with oil filter) ltr. (qt.)	3.3 (3.5)	3.3 (3.5)	3.3 (3.5)	3.3 (3.5)	3.3 (3.5)

Turbo Diesel Base Engines

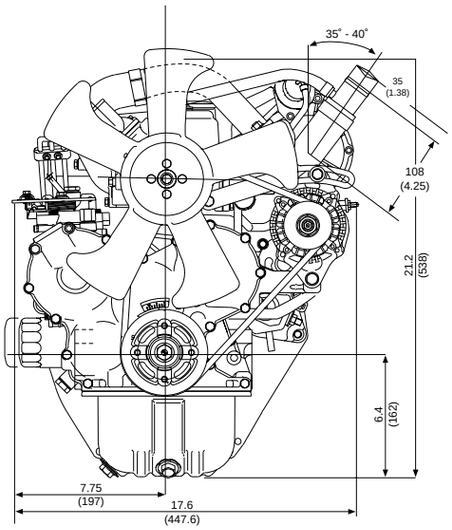

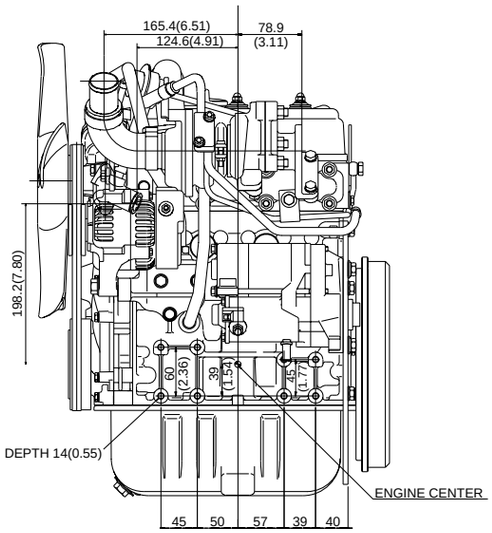

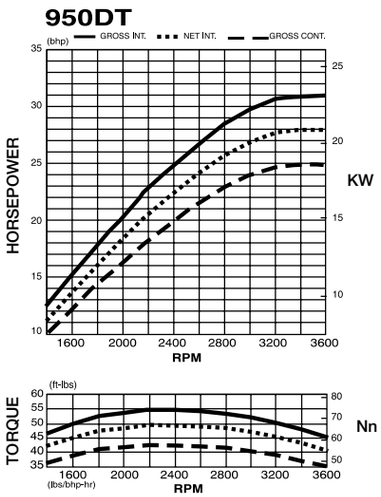

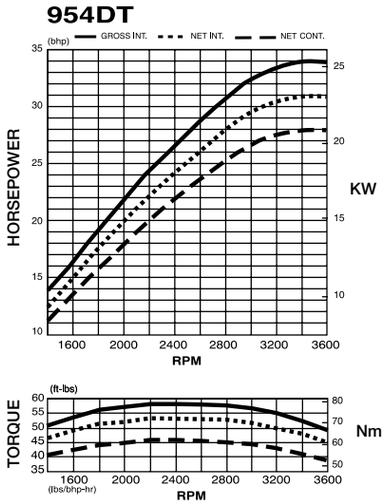

Power Units

The basic unit includes the following accessories:

Gasoline

- Radiator-S Kit
- Radiator Support
- Air Cleaner with Hose & Bracket
- (4) Mounting Feet A
- Exhaust Muffler & Adapter (loose)
- Ignition Coil Bracket

	Service Part No.*	OEM Part No.
700G	825365	835049
950G	825366	835050

* CSSDs and Authorized Dealers reference these part numbers

Diesel

- Radiator-S Kit
- Radiator Support
- Air Cleaner with Hose & Bracket
- (4) Mounting Feet A
- Exhaust Muffler & Adapter (loose)
- Diesel Fuel Filter

	Service Part No.*	OEM Part No.
700D	825367	835051
850D	825368	835052
950D	825369	835053

* CSSDs and Authorized Dealers reference these part numbers

RAIL MOUNTS

Gasoline And Diesel

- Radiator-S Kit
- Integral Radiator Mount and Engine Support
- Diesel Fuel Filter (loose)
- Exhaust Muffler & Adapter (loose)
- Fan Guard
- Air Cleaner with Hose & Bracket

	OEM Part No.
700G	835114
700D	835115
850D	835113
950G	835111
950D	835112

Engine Accessories

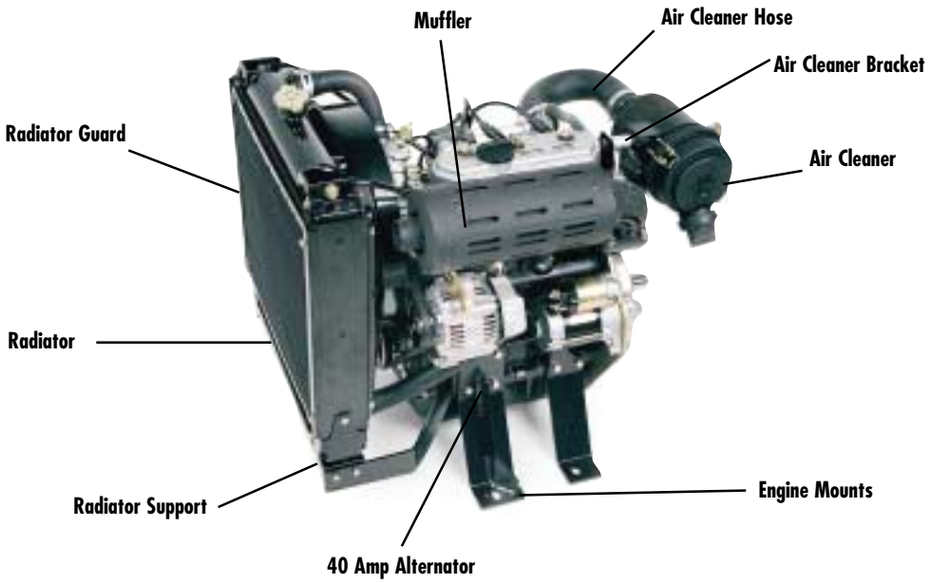

Service Part No.*	OEM Part No.	Accessory Kit	Includes
825137	835007	Air Cleaner	Paper element with cyclone pre-cleaner, straight out, mounting band
825125	835008	Air Cleaner	Paper element with cyclone pre-cleaner, 90° out, mounting band
825218	835009	Air Cleaner Bracket	Air Cleaner Mounting Bracket (except Turbo Diesel)
825214	835034	Engine Mounts	(4) Mounting Feet for base engine
825215	835035	Engine Mounts	Same, but for engine with SAE bell housing (825099)
825098	835018	Housing Flange	Flywheel housing with SAE "A" type hydraulic pump flange–no coupling
825113	835019	Housing Flange	Flywheel housing with SAE "B" type hydraulic pump flange–no coupling
825099	835002	SAE Housing & Flywheel	SAE flywheel #6-1/2 & SAE bell housing #5 instead of end plate
825200	835029	Muffler	Exhaust muffler with guard
825358	835025	Muffler Adapter	Muffler Adapter 45°, Gasket, Fasteners
825124	835004	Radiator-S Kit	340 mm Radiator, Fan Shroud (320 mm), Surge Tank with Bracket, Hoses with clamps
825497	835061	Radiator-S Kit	340 mm Radiator, Fan Shroud (340 mm), Surge Tank with Bracket, Hoses with clamps
n/a	835073	Radiator-S Kit	425 mm Radiator, Fan Shroud (340 mm), Surge Tank with Bracket, Hoses with clamps
825103	835022	Radiator Guard	Protective Grill, 340 mm Radiator
820259	835027	Radiator Screen	Removable Debris Screen, 340 mm Radiator
n/a	835075	Radiator Screen	Removable Debris Screen, 425 mm Radiator
825216	835003	Radiator Mounting Kit	Radiator-to-engine Mounting System, 340 mm Radiator
n/a	835074	Radiator Mounting Kit	Radiator-to-engine Mounting System, 425 mm Radiator
825072	835023	Radiator Drain Valve Assembly	Remote Radiator Drain Kit
825268	835039	Stub Shaft 1-1/8"	Stub Shaft 1-1/8" Diameter with 1/4 keyway
825078	835020	Stub Shaft 1-7/16"	Stub Shaft 1-7/16" Diameter with 1/4 keyway
	835036	A/C Hose 90° Bend	A/C Hose 90° Bend with 2 clamps
	835037	A/C Hose 180° Bend	A/C Hose 180° Bend with 2 clamps
825219	835028	Diesel Fuel Filter	Fuel Filter with primer pump, water separator and water indicator switch
825449	835046	Wire Harness Extension	Length: 6'
825447	835045	Wire Harness (Diesel)	Single connector hook-up, 42" wire harness extension
825448	835043	Wire Harness (Gas)	Single connector hook-up, 42" wire harness extension
825450	835047	Control Panel (Gas)	Low oil pressure, high engine temperature, and charging indicators
825451	835048	Control Panel (Diesel)	Low oil pressure, high engine temperature, glow plug, fuel filter, and charging indicators
n/a	835092	KTR A Coupling/ (9T)	Bowex Coupling includes: flange and splines
n/a	835093	KTR B Coupling/ (13T)	Bowex Coupling includes: flange and splines
n/a	835094	KTR BB Coupling/ (15T)	Bowex Coupling includes: flange and splines

* CSSDs and Authorized Dealers reference these part numbers

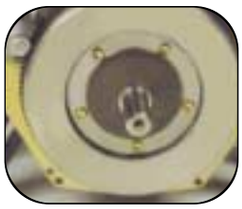
Stub Shaft

Hydraulic Pump Flange

Diesel Fuel Filter

Muffler & Adapter

The Vanguard™ 3/LC delivers the ultimate combination of reliability, versatility and environmental compatibility.

Reliability. The Vanguard™ 3/LC is the liquid-cooled extension of Briggs & Stratton Commercial Power's line of premium VANGUARD air-cooled engines. These industrial-grade engines are carefully balanced to achieve the lowest possible vibration level, a fine-tuned timing gear tooth profile, and helical angle that pushes the gears away from the gear cover, eliminating the transmission of gear train and internal mechanical noises.

Versatility. Vanguard 3/LC engines are interchangeable. Each model shares the same envelope, PTO and mounting dimensions. Additionally, gas and diesel models are available with an optional electronic governor to meet the most stringent demands for accurate speed control with single or multi-speed operations. All service points are located on one side, too, for convenient accessibility.

Emission Compliance. Our extensive research has led to an industry first for diesel engines—a single ply, super thin metal head gasket. This gasket optimizes combustion chamber performance, which assures a cleaner, more efficient burn and significantly lowers combustion noise. This facilitates compliance with current and future emission regulations.

When the challenge is to find a reliable, versatile 3-cylinder engine that must meet environmental standards, the solution is the Vanguard 3/LC.

Briggs & Stratton Daihatsu LLC

COMMERCIAL POWER

Milwaukee, Wisconsin 53201-0702 U.S.A. Telephone (414) 259-5596
Fax (414) 256-1181 www.commercialpower.com

Printed in the U.S.A.

© 2003 Briggs & Stratton Corporation

MP-6380-1/03